OPERATOR'S MANUAL E2P10-PXXXX-XX-XXA

INCLUDING: OPERATION, INSTALLATION AND MAINTENANCE

RELEASED: 3-6-26
(REV: A)

1" EVO 210 SERIES ELECTRIC DIAPHRAGM PUMP

(NON-METALLIC FLUID SECTIONS)

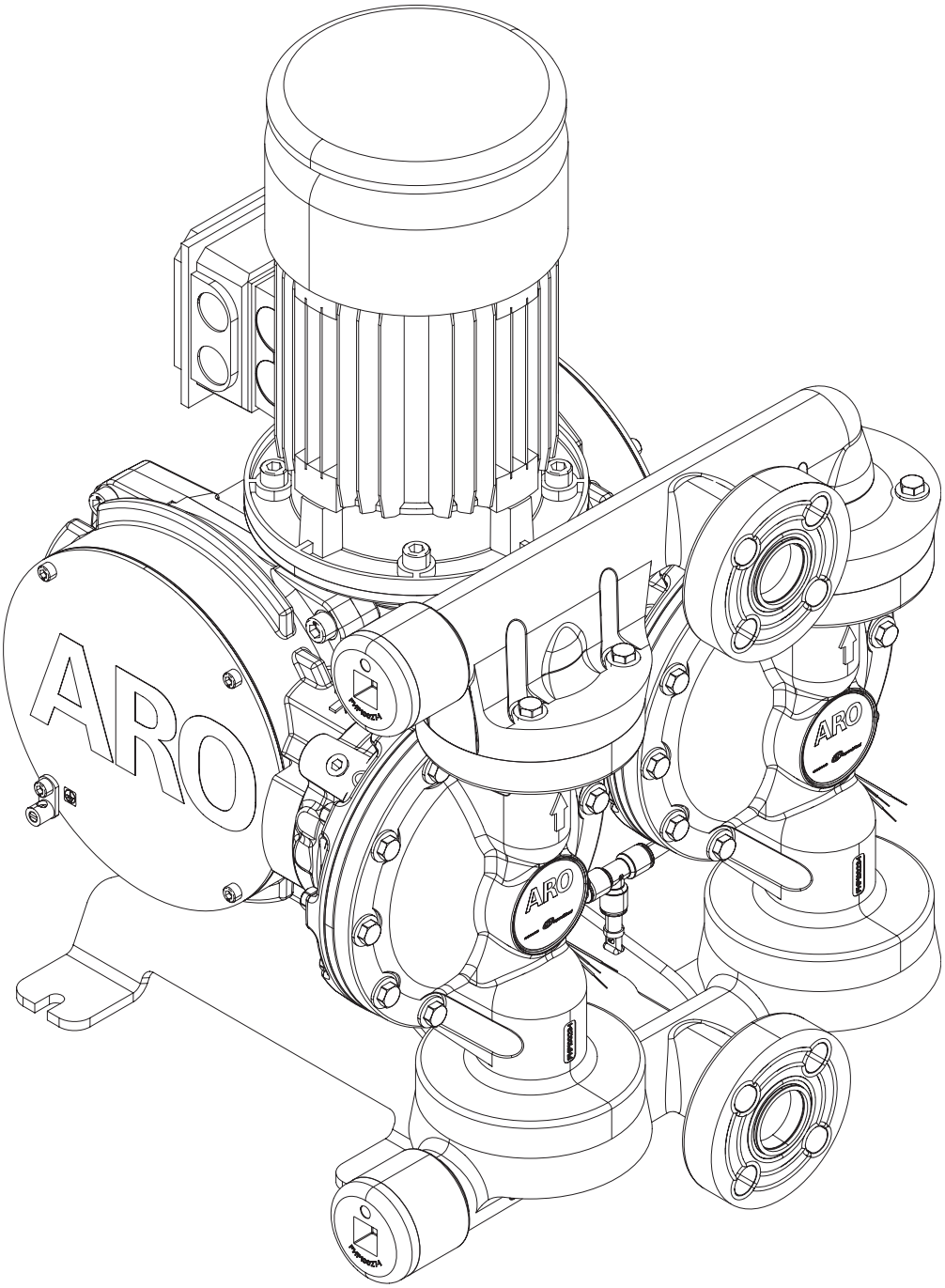

ARO
209 NORTH MAIN STREET – BRYAN, OHIO 43506
(800) 495-0276 • FAX (800) 892-6276
© 2026
arozone.com

ARO®

1. TECHNICAL SPECIFICATIONS

1.1. Pump Data

Models..... See Model Description Chart for "-XXXXX-XX-XXA".
Pump Type.. Electric Diaphragm Pump
Material .... See Model Description Chart
Weight
E2P10-KXXXX-XX-XXA..... 184 lbs (83.5 kg)
E2P10-PXXXX-XX-XXA..... 176 lbs (79.8 kg)

E2P10-XXXXX-AX-XXA
Maximum Inlet Pressure① ..... 25 psig (1.72 bar)
Average working Pressure Limit② . 50 psig (3.45 bar)
Maximum Outlet Working Pressure② ..... 100 psig (6.89 bar)

E2P10-XXXXX-BX-XXA
Maximum Inlet Pressure① ..... 35 psig (2.41 bar)
Average working Pressure Limit② . 70 psig (4.83 bar)
Maximum Outlet Working Pressure② ..... 140 psig (9.65 bar)

E2P10-XXXXX-CX-XXA
Maximum Inlet Pressure① ..... 50 psig (3.45 bar)
Average working Pressure Limit② . 95 psig (6.55 bar)
Maximum Outlet Working Pressure② ..... 190 psig (13.1 bar)

Maximum Flow Rate E2P10-XXXXX-AX-XXA
Values listed below for 4 pole motor (1800 RPM sync. speed)
39 GPM (148 lpm) @ 80 Hz (2400 RPM) motor speed
28 GPM (106 lpm) @ 60 Hz (1800 RPM) motor speed
21 GPM (79 lpm) @ 50 Hz (1500 RPM) motor speed

Maximum Flow Rate E2P10-XXXXX-BX-XXA
Values listed below for 4 pole motor (1800 RPM sync. speed)
37 GPM (140 lpm) @ 90 Hz (2700 RPM) motor speed
22 GPM (83 lpm) @ 60 Hz (1800 RPM) motor speed
18 GPM (68 lpm) @ 50 Hz (1500 RPM) motor speed

Maximum Flow Rate E2P10-XXXXX-CX-XXA
Values listed below for 4 pole motor (1800 RPM sync. speed)
36 GPM (136 lpm) @ 120 Hz (3600 RPM) motor speed
19 GPM (72 lpm) @ 60 Hz (1800 RPM) motor speed
15 GPM (57 lpm) @ 50 Hz (1500 RPM) motor speed

Displacement / Cycle..... 0.17 gal. (0.64 lit.)
Maximum Particle Size ..... 1/8" dia. (3.3mm)
Maximum Wet Suction Lift..... 31.2 ft H_2O (9.5 m H_2O)
Maximum Dry Suction Lift..... 11.3 ft H_2O (3.4 m H_2O)

Maximum Temperature Limits

	Min	Max	Min	Max
Ambient Temperature	0° F	104° F	-18° C	40° C
Fluid Temperature	32° F	212° F	0° C	100° C
Fluid temperature should be further limited of one of the following materials of construction is used in the wetted sections:				
PTFE	40° F	212° F	4° C	100° C

Dimensional Data..... See page 18
Mounting Dimension .. QTY (4) 10.3 mm Wide Slot on 262 mm x 291 mm Pattern

Noise Level

Noise Emission Values in accordance with ISO 4871③	
Pump Configuration	**E2P10-PAPAA-CA-A0A (Santoprene Balls / Poly Seats)**
Sound Power	
50 Hz @ 0 psig	75.2 db(A)
50 Hz @ 90 psig	80.3 db(A)
60 Hz @ 0 psig	79.3 db(A)
60 Hz @ 90 psig	82.0 db(A)
120 Hz @ 0 psig	91.9 db(A)
120 Hz @ 30 psig	92.1 db(A)
Sound Pressure	
50 Hz @ 0 psig	65.1 db(A)
50 Hz @ 90 psig	70.1 db(A)
60 Hz @ 0 psig	69.6 db(A)
60 Hz @ 90 psig	71.9 db(A)
120 Hz @ 0 psig	81.8 db(A)
120 Hz @ 30 psig	82.0 db(A)

① **NOTE**: When pump is subjected to maximum inlet pressure, note that average working pressure limit and maximum outlet working pressure cannot be exceeded.

② **NOTE**: Outlet pressure produced by pump fluctuates with each cycle, peaking at a value defined as the "Outlet working pressure" and has an average value defined as the "average working pressure". Maximum peak pressure values cannot exceed "Maximum outlet working pressure". Maximum average pressure values cannot exceed "average working pressure limit". End user piping design must be rated to withstand "Maximum outlet working pressure".

③ The pump sound pressure levels published here have been updated to an Equivalent Continuous Sound Level (LA_{eq}) to meet the intent of ANSI S1.13-1971, CAGI-PNEUROP S5.1 using four micro phone locations.

NOTE: Motors will operate direct on line power 50 Hz or 60 Hz depending on the country of installation. The end user will need to supply their own variable frequency drive (VFD) if they will operate at frequencies other than 50 Hz or 60 Hz.

NOTE: Except where noted otherwise, performance values on this document for pump outfitted with Polypropylene fluid wetted sections and Santoprene balls, seats and diaphragms. Pumping water at ambient temperature.

• Viton® is a registered trademarks of the Chemours Company • Loctite® is a registered trademark of Henkel Corporation •
• Santoprene® is a registered trademark of Celanese • ARO® is a registered trademark of Ingersoll-Rand Company •

2. MODEL CODE DETAILS

2.1. MODEL CODE EXPLANATION

E2P10 - X X X X X - X X - X X A

Wetted Parts
- K - PVDF
- P - Polypropylene

Port
- A - 1 - 11 - 1/2 NPTF - 2
- B - 1 - 11 BSP
- Y - 1" ANSI / DIN Flange / Center

Seat
- H - 440 SST
- K - PVDF
- P - Polypropylene
- S - 316 SST

Ball
- A - Santoprene®
- S - 316 SST
- T - PTFE
- V - Viton

Diaphragms
- A - Santoprene®
- T - PTFE

Gearbox
- A - Gearbox i = 12.5
- B - Gearbox i = 15
- C - Gearbox i = 20

Motor / Adapter
- A - NEMA 140TC Adapter / NEMA 2 HP (1.5 kW) 4 Pole Ordinary Location Motor (1800 RPM sync. speed @ 60 Hz)
- B - IEC 90 B5 A200 Adapter / IEC 2 HP (1.5 kW) 4 Pole Ordinary Location Motor (1800 RPM sync. speed @ 60 Hz)

Specialty Code # 1
- A - Visual Leak Detection
- B - Leak Detection Sensor (CCC)
- C - Leak Detection Sensor (ATEX / IECEx / NEC / CEC)
- D - Overpressure Protection (Integrated PRV)

Specialty Code # 2
- 0 - No Option

Revision
- A - Revision

NOTICE: All possible options are shown in the chart, however, certain combinations may not be recommended. Consult a representative or the factory if you have questions concerning availability.

3. OPERATING AND SAFETY PRECAUTIONS

READ, UNDERSTAND, AND FOLLOW THIS INFORMATION TO AVOID INJURY AND PROPERTY DAMAGE.

⚠ WARNING STATIC SPARK. Can cause explosion resulting in severe injury or death. Ground pump and pumping system.

- **Sparks can ignite flammable material and vapors.**
- **The pumping system and object being sprayed must be grounded when it is pumping, flushing, recirculating or spraying flammable materials such as paints, solvents, lacquers, etc. or used in a location where surrounding atmosphere is conducive to spontaneous combustion. Ground the dispensing valve or device, containers, hoses and any object to which material is being pumped.**
- **Secure pump, connections and all contact points to avoid vibration and generation of contact or static spark.**
- **Consult local building codes and electrical codes for specific grounding requirements.**
- **After grounding, periodically verify continuity of electrical path to ground. Test with an ohmmeter from each component (e.g. hoses, pump, clamps, container, spray gun, etc.) to ground to insure continuity:**
  - **For "intrinsically safe" applications: ohmmeter should show less than 1 ohm.**
  - **For "ordinary" applications: ohmmeter should show less than 5 ohms.**
  - **Pump components surface resistance: materials are generally considered conductive with resistance less than 1 X 10^6 ohms.**
- **Submerse the outlet hose end, dispensing valve or device in the material being dispensed if possible. (Avoid free streaming of material being dispensed.)**
- **Use hoses incorporating a static wire.**
- **Use proper ventilation.**
- **Keep inflammables away from heat, open flames and sparks.**
- **Keep containers closed when not in use.**

⚠ WARNING Excessive fluid pressure developed by pump can cause personal injury, pump damage or property damage.

- Fluid pressure developed by the pump must not exceed the maximum as stated on the pump model plate.
- Be sure material hoses and other components are able to withstand fluid pressures developed by this pump. Check all hoses for damage or wear. Be certain dispensing device is clean and in proper working condition.

⚠ WARNING PUMP NOT DESIGNED FOR USE IN HAZARDOUS DUTY APPLICATIONS.

⚠ WARNING ELECTRIC SHOCK HAZARD. This equipment must be grounded. Improper grounding, setup, or usage of the system can cause electric shock.

- Turn off and remove power before disconnecting any cables and before servicing or installing equipment.
- Connect only to grounded power source.
- All electrical wiring must be done by a qualified electrician and comply with all local codes and regulations.

⚠ WARNING HAZARDOUS PRESSURE. Can result in serious injury or property damage. Do not service or clean pump, hoses or dispensing valve while the system is pressurized.

- Disconnect and lockout / tagout power supply to electric motor. Relieve pressure from the system by opening dispensing valve or device and / or carefully and slowly loosening and removing outlet hose or piping from pump.

⚠ WARNING HAZARDOUS MATERIALS. Can cause serious injury or property damage. Do not attempt to return a pump to the factory or service center that contains hazardous material. Safe handling practices must comply with local and national laws and safety code requirements.

- Obtain Material Safety Data Sheets on all materials from the supplier for proper handling instructions.

⚠ WARNING EXPLOSION HAZARD. Models containing aluminum wetted parts cannot be used with 1-1-1 -Trichloroethane,Methylene Chloride or other Halogenated Hydrocarbon solvents which may react and explode.

- Check pump crankcase section, fluid caps, manifolds and all wetted parts to assure compatibility before using with solvents of this type.

⚠ WARNING MISAPPLICATION HAZARD. Do not use models containing aluminum wetted parts with food products for human consumption. Plated parts can contain trace amounts of lead.

⚠ WARNING DUST IGNITION HAZARD. Certain dust particles may ignite at pump surface temperature limits. Ensure proper housekeeping to eliminate dust buildup on the pump.

⚠ CAUTION CAUTION HOT SURFACE. ELECTRIC motor exterior surfaces may become hot during operation. Proper personal protective equipment (PPE) for hot surfaces should be worn. Check to ensure parts have cooled down sufficiently prior to any maintenance.

⚠ CAUTION Verify the chemical compatibility of the pump wetted parts and the substance being pumped, flushed or recirculated. Chemical compatibility may change with temperature and concentration of the chemical(s) within the substances being pumped, flushed or circulated. For specific fluid compatibility, consult the chemical manufacturer.

⚠ CAUTION HOT SURFACE. Wetted sections can reach up to the same temperature as the fluid temperature (up to 100°C). Precautions should be taken to restrict access to hot surfaces when needed. Proper personal protective equipment (PPE) for hot surfaces should be worn. Check to ensure parts have cooled down sufficiently prior to any maintenance.

⚠ CAUTION CAUTION MOTOR OVER-CURRENT. Depending on the backpressure on the pump and the motor speed, it is possible that the motor may exceed its rated current (amperage). End user must follow motor manufacturer's instructions regarding motor current (amperage) and operation. If motor rated current (amperage) is exceeded motor may become hot to touch.

⚠ CAUTION Maximum temperatures are based on mechanical stress only. Certain chemicals will significantly reduce maximum safe operating temperature. Consult the chemical manufacturer for chemical compatibility and temperature limits. Refer to PUMP DATA on page 2 of this manual.

⚠ CAUTION Be certain all operators of this equipment have been trained for safe working practices, understand it's limitations, and wear safety goggles / equipment when required.

⚠ CAUTION Do not use the pump for the structural support of the piping system. Be certain the system components are properly supported to prevent stress on the pump parts.

- Suction and discharge connections should be flexible connections (such as hose), not rigid piped, and should be compatible with the substance being pumped.

⚠ CAUTION Prevent unnecessary damage to the pump. Do not allow pump to operate when out of material for long periods of time.

- Disconnect power supply from motor when system sits idle for long period of time.

⚠ CAUTION Use only genuine ARO replacement parts to assure compatible pressure rating and longest service life.

NOTICE TORQUE ALL FASTENERS BEFORE OPERATION. Creep of housing and gasket materials may cause fasteners to loosen. Torque all fasteners to ensure against fluid or air leakage.

⚠ WARNING	= Hazards or unsafe practices which could result in severe personal injury, death or substantial property damage.
⚠ CAUTION	= Hazards or unsafe practices which could result in minor personal injury, product or property damage.
NOTICE	= Important installation, operation or maintenance information.

4.1. Introduction

The EVO electric diaphragm pump offers a unique combination of benefits in the positive displacement pump market. It features a broad range of material compatibility options, high volume delivery, secondary containment and is efficient. The pump works on the principle of converting rotary motion from an AC induction motor to linear reciprocating motion to drive a diaphragm. The motor is coupled directly to a gearbox and rotating eccentric crankshaft to drive connecting rods which in turn drive independent diaphragms. Pump cycling will begin as rotational speed is provided by the drive motor. As backpressure builds, the pump will reduce speed until maximum available torque is reached by the motor.

Note that outlet average pressure limit and maximum outlet working pressure must not be exceeded. Deadhead capability is not built into the pump by itself and the pump should only be subjected to a overpressure (deadhead) scenario if it is equipped with overpressure protection via an integrated pressure relief valve (PRV) or the end user piping must be designed in such a way to compensate for these scenarios.

4.2. Overpressure Protection (Integrated Pressure Relief Valve / PRV)

The pump can also be selected with or without an integrated pressure relief valve (PRV). The purpose of the PRV is to provide protection specifically to the pump in the event of a rapid pressure spike due to downstream fluid dynamics, sudden valve closure, or blockage. The integrated PRV does not replace the need for any system level protection downstream of the pump. It is only intended to handle transient events and should not be used for continuous by-pass. The PRV is not adjustable, and it is set to open above the max allowable pressure of the pump and should not open under normal operating conditions. The pump can be configured without the integrated pressure relief valve when the application does not require the additional level of pump protection or when sufficient system level protection is in place.

4.3. Diaphragm Leak Detection

The base model pump does not include integrated leak detection sensors but does include visual leak detection. It is recommended that some method of leak detection is implemented to ensure that the pump does not continue to run in the event of a diaphragm failure.

NOTICE It is recommended to remove plug (item 233) from visual leak detect tubing (item 184) and subsequently install tubing (supplied by end user) into the tee (item 232) which can be routed to a container or reservoir for ease of verification in the event of a leak.

If this is not preferred, it is recommended to regularly inspect the visual leak detection tube for the presence of fluid indicating a leak. The pump is equipped with a rubber bellows for secondary containment to ensure separation of the process fluid and the crankcase area, however, the bellows is not intended to operate for an extended period of time when exposed to the process fluid and pressure. The pump can be configured to include optical leak detection sensors for ordinary applications.

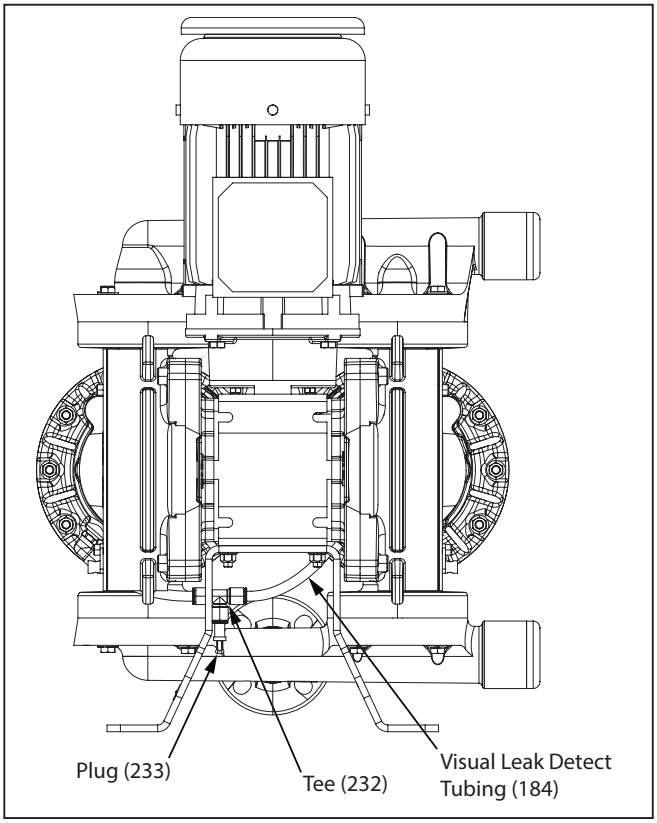

4.4. Storage

Place the equipment in a clean dry area, protected from impacts, vibrations, temperature extremes and in an environment with relative humidity less than 90%.
When storing for longer than six months, consult the manufacturer.

4.5. Unpacking

Items supplied vary according to product configuration.
Make sure that the items supplied and the information on the nameplate correspond to the order confirmation.
Check the individual packaging and the product visually for damage caused by inappropriate handling during shipment.
NOTE: In-case of damage, report the damage to the transport company and thereafter contact IR distributor.

NOTICE

To protect consumer rights please keep the Label intact on the Pump.

Pump and Motor Installation

⚠ WARNING ***Pump and motors are industrial products. They must therefore be installed by qualified, experienced and authorized personnel. The safety of people, animals and property must be ensured when fitting the motors into pump.***

⚠ CAUTION ***Prior to commissioning for all motors, rotate the motor at no load (no mechanical load) for 2 to 5 minutes, checking that there is no abnormal noise. If there is any abnormal noise, refer to motor manufacturer's instructions.***

⚠ WARNING ***Before starting the motor, it is advisable to check the insulation between the phases and earth, and between phases.***

Once Pump has been fully unpackaged and inspected, for lifting straps wrapped around the support foot, Gearbox and manifolds) See Figure 1.

- Ensure straps and lifting device are properly rated. Refer section 1.1 for pump weight.
- Do not use pump Manifolds alone to lift or move the pump.
- Ensure installation location has enough overhead room to install or remove vertically from above.
- Ensure adequate clearance around pump for sufficient access and ventilation.
- Ensure the pump is installed on flat level surface.

Pump support foot must be secured firmly to the Ground or mounting surface using qty (4) 10 mm slots.

- Refer to section 12 for bolt slot spacing.
- Pump must be positioned such that fluid inlet and fluid outlet port are easily accessible.

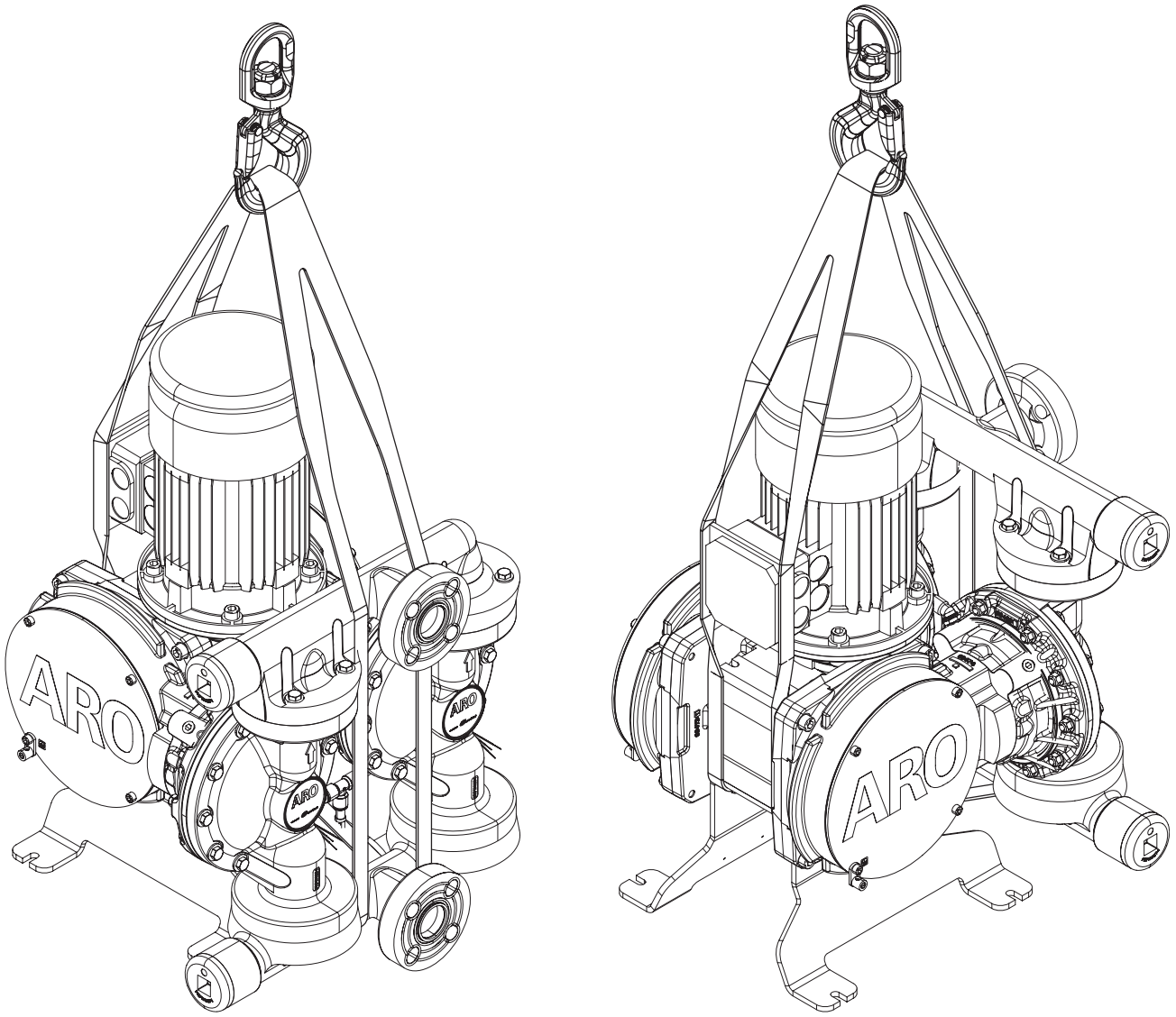

Figure 1

6. ELECTRICAL INSTALLATION

6.1. General Wiring

All electrical wiring must be performed by qualified, experienced, and certified electrician and comply with all local and national electrical codes.

System designer, installer, and maintenance personnel are responsible to ensure proper wiring and grounding (earth) and protection from lightning according to IEC 62305-3:2010.

Ensure that the motor is properly de-energized prior to any maintenance and that proper lock out / tag out procedures are followed.
Maintenance should not be completed in the presence of an explosive gas or dust atmosphere.

6.2. Motor - Input Power Wiring

End user to follow motor manufacturer's instructions and recommendations for motor wiring. All electrical wiring must be done by qualified, experienced and certified electrician and comply with all local and national electrical codes.

6.3. Leak Detector Wiring

General Description:

An ARO Diaphragm pump equipped with the ARO Leak Detection Sensor warns of a Diaphragm failure by sensing the presence of liquid in the air cap of the pump. This system uses a liquid sensor in each of the air caps which will can send an output signal to the end user control system to shut down the motor when fluid is detected.

Installation and Warnings:

NOTE: All WIRING MUST COMPLY WITH ALL LOCAL AND / OR NATIONAL ELECTRICAL CODES.

- The Leak Detection Sensor components must be installed by a qualified electrician in compliance with all national, state and local codes and regulations to reduce the risk of electrical shock or other serious injury during installation and operation.
- Some local electrical codes may require the installation of rigid conduit.
- ARO is not responsible for accidents resulting from improper installation of components or hardware.
- Do not attempt any service without disconnecting all electrical supply source.

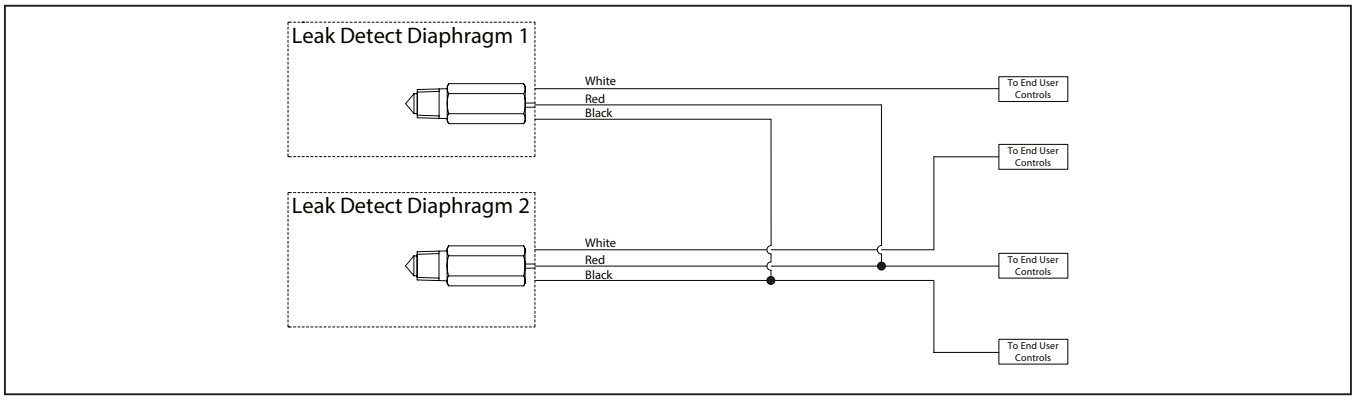

Leak Detection Sensor PN	Voltage	Device Rating (mA)	Temperature Rating
96270-2 (ATEX / IECEx / NEC / CEC)	24 VDC	40	-0°F to +176°F (-18°C to +80°C)
98006 (CCC)	24 VDC	40	-4°F to +158°F (-20°C to +70°C)

NOTE: The same leak detection sensor is used for both ordinary and hazardous applications.

- The Leak Detection Sensor comes with 2m of cable length with flying lead connections. It is recommended to combine leak sensor cables into a single low voltage cable bundle to send to the end user controls.

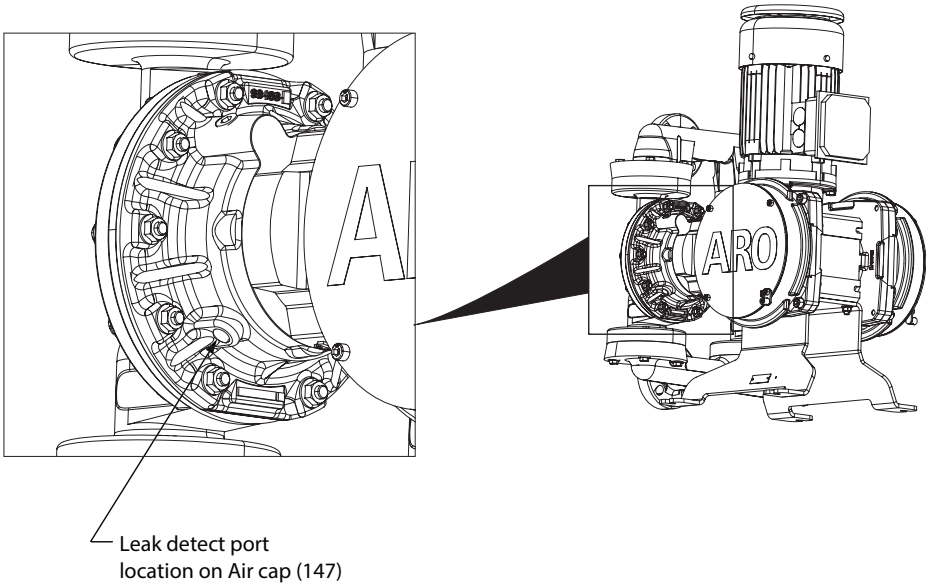

Figure 2

7. GROUNDING

Before operating the pump, ground the system as explained below.

7.1. Pump Grounding

- To ground pump, use grounding terminal and grounding wire with one of the grounding lugs (187) connecting actuator housing end cover (228) to the actuator housing (101).
- The cross section of grounding wire must be at least 4 mm^2

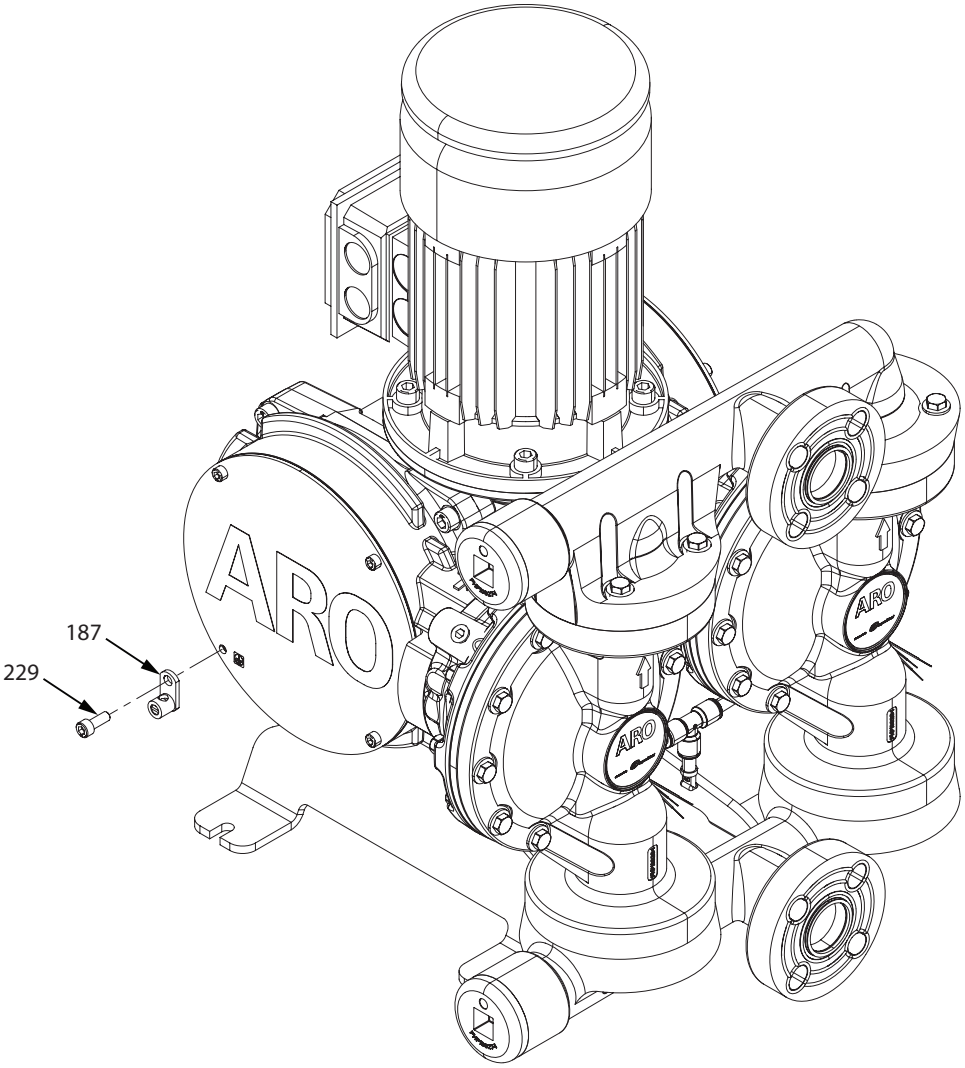

Figure 3

7.2. Electric Motor Grounding

⚠ WARNING

It is compulsory to earth the motor. Earthing must be performed in accordance with current regulations (protection of workers).

End user to follow motor manufacturer's instructions and recommendations for motor grounding. All electrical wiring must be done by qualified, experienced, and certified electrician and comply with all local and national electrical codes.

8. OPERATION

Pre Operation Checklist

- Ensure motor terminal box is closed and secured.
- Ensure that input power to the unit is off and locked out.
- Check for proper grounding of the motor and the pump.
- Inspect the motor for loose wiring connections.
- Confirm that the supply voltage, frequency and wiring arrangement correspond to the ratings of the motor.
- Always flush the pump with a solvent compatible with the material being pumped if the material being pumped is subject to "setting up" when not in use for a period of time.
- The outlet material volume is governed not only by the Fluid pressure but also by the material supply available at the inlet. The material supply piping should not be too small or restrictive. Be sure not to use hose which might collapse.
- Secure the pump support foot using bolts to anchor to a suitable surface (concrete floor) to ensure against damage by vibration.
- If this Pump is used for prolonged operation at low speed ensure there is enough ventilation around the motor to cool it sufficiently.
- Using a motor starter or inverter (VFD), start rotation of the motor to begin pumping.
- Depending on the backpressure on the pump and the motor speed, it is possible that the motor may exceed its rated current (amperage). End user must follow motor manufacturer's instructions regarding motor current (amperage) and operation.
- The maximum published flow and pressure should not be exceeded at any given operating point.

9. MAINTENANCE

Refer to the part views and descriptions as provided on page 10 through 14 for parts identification information.

- Service area should pertain only to the fluid section for regular maintenance.
- Provide a clean work surface to protect sensitive internal moving parts from contamination from dirt and foreign matter during service disassembly and reassembly.
- Keep good records of service activity and include pump in preventive maintenance program.
- Before disassembling
  - Remove mounting hardware from inlet and outlet manifolds and remove manifolds to empty any captured material from within.

MAINTENANCE RECOMMENDATIONS – FLUID SECTION		
Maintenance Item	**Frequency**	**Indication**
Diaphragms	As needed	Optional leak detect sensors (PN 96270-2 / 98006) are recommended in order to detect diaphragm damage resulting in a fluid leak, at which time diaphragms should be replaced. If sensors are not used, the pump is equipped with clear tubing for visual detection of a leak. Otherwise, it is recommended to disassemble and replace diaphragms every 1400 hours of pump operation.
Rubber Bellows	Every Diaphragm change	Preventative to ensure robust protection of pump actuator module.
Balls	As needed	Erratic pump behavior, excessive pulsation, reduction in flow; Visual inspection.
Seats	As needed	Visual inspection
Integrated PRV Bellows	As needed, for models supplied with Overpressure Protection (Integrated PRV)	In the event of a PRV bellows rupture, fluid will be fully contained and directed into the air cap.

NOTE: Frequency of maintenance fluid section maintenance items is dependent on fluid abrasiveness, cycle rate, pressure conditions, temperature, compatibility of the fluid, and duty cycle.

PARTS LIST / E2P10-XXXXX-XX-XXA

Fluid Section Service Kits 637601-XXX or 637601-XX:

637601-XXX Fluid Section Service Kits **with** Seats include: Seats, Balls, Diaphragms, and items 3, 4, 12, 13, 19, and 33 (listed below).

637601-XX Fluid Section Service Kits **without** Seats include: Balls, Diaphragms, and items 3, 4, 12, 13, 19, and 33 (listed below).

COMMON PARTS

Item	Description	Qty	Part No.	Mtl
12	Soft Washer	2	98161	[SP]
13	Bellows	2	98119-2	[V]
16	Bellows Plate	2	98118-2	[SS]
17	Screw, SHCS	8	98057	[SS]
20	Pin	4	Y178-37-S	[C]
101	Actuator Housing	2	98474	[A]
102	Adapter Plate	2	98473-1	[C]
103	O-ring	2	Y325-368	[B]
104	Screw, SHCS	8	Y256-106-E	[C]
105	Support Foot	1	FHP10028	[C]
106	Screw, Hex Head Cap	4	Y255-83-E	[C]
107	Crankshaft Bearing	2	98481	[C]
108	External Retaining Ring	2	Y145-35	[C]
109	Gasket	2	98482	[EP]
118	Crank Shaft	1	98456	[C]
119	Connecting Rod Bearing	2	98463	[C]
131	Screw, SHCS	8	Y256-103-E	[C]

COMMON PARTS

Item	Description	Qty	Part No.	Mtl
140	Connecting Rod	2	98476	[C]
144	Bushing	2	98483	[P]
148	Spring Pin	2	98461	[C]
183	Connector	2	98060	[Ny]
184	Tubing, (0.375 OD)	0.31 FT	98225-XXX-X	[Ny]
187	Grounding Lug	2	93004	[Co]
194	Screw, FHSC	8	98315	[C]
195	Countersunk Washer	8	98316	[SS]
197	Key	2	98460	[C]
202	Key	2	98459	[C]
224	Bearing Bushing	2	98478	[C]
225	Washer	4	98215	[C]
226	Nut	4	98220	[C]
227	Cam	2	98454	[C]
228	Cover	2	98479	[A]
229	Screw, SHCS	8	Y256-62-E	[SS]
230	Spring Pin	4	98461	[C]
231	Set Screw	2	98462	[C]

SEAT OPTIONS E2P10-XXXXX-XX-XXA

"21"							
-XXXXX	Seat	Qty	Mtl	-XXXXX	Seat	Qty	Mtl
-XXHXX	94706	(4)	[SH]	-XXPXX	94707-1	(4)	[P]
-XXKXX	94707-2	(4)	[K]	-XXSXX	96151	(4)	[SS]

BALL OPTIONS E2P10-XXXXX-XX-XXA

★ "22"							
-XXXXX	Ball	Qty	Mtl	-XXXXX	Ball	Qty	Mtl
-XXXAX	93278-A	(4)	[Sp]	-XXXTX	93278-4	(4)	[T]
-XXXSX	92408	(4)	[SS]	-XXXVX	93278-3	(4)	[V]

MANIFOLD / FLUID CAP MATERIAL OPTIONS E2P10-PXXXX-XX-XXA

			Polypropylene					
			NPT Threads		BSP Threads		ANSI / DIN Flange	
			E2P10-PAXXX-XX-XXA		E2P10-PBXXX-XX-XXA		E2P10-PYXXX-XX-XXA	
Item	Description	Qty	Part No.	Mtl	Part No.	Mtl	Part No.	Mtl
5	Backup washer	2	98164-1	[SS]	98164-1	[SS]	98164-1	[SS]
6	Fluid side Washer	2	98174-1	[P]	98174-1	[P]	98174-1	[P]
15	Fluid cap	2	FHP10023-1	[P]	FHP10023-1	[P]	FHP10023-1	[P]
26	Bolt, Hex head	16	FHP10047	[SS]	FHP10047	[SS]	FHP10047	[SS]
27	Bolt, Hex head	20	FHP10048	[SS]	FHP10048	[SS]	FHP10048	[SS]
28	Washer	36	96217	[SS]	96217	[SS]	96217	[SS]
29	Flange Nut	20	FHP10049	[SS]	FHP10049	[SS]	FHP10049	[SS]
60	Inlet Manifold	1	FHP10024B-1	[P]	FHP10024C-1	[P]	FHP10024A-1	[P]
61	Outlet Manifold	1	FHP10025B-1	[P]	FHP10025C-1	[P]	FHP10025A-1	[P]
73	Pipe Plug	2	FHP10027-1	[P]	FHP10027-1	[P]	FHP10027-1	[P]
145	O-ring	2	Y325-237	[B]	Y325-237	[B]	Y325-237	[B]
146	Screw, SHCS	8	Y256-103-E	[C]	Y256-103-E	[C]	Y256-103-E	[C]
147	Air Cap	2	98488-1	[SS]	98488-1	[SS]	98488-1	[SS]
189	Pipe Plug	2	Y17-51-N	[C]	Y17-51-N	[C]	Y17-51-N	[C]

MATERIAL CODE

[A]	=	Aluminum
[B]	=	Nitrile
[C]	=	Carbon Steel
[Co]	=	Copper
[EP]	=	EPDM
[K]	=	PVDF
[Ny]	=	Nylon
[P]	=	Polyproplene
[SH]	=	Hard Stainless Steel
[SP]	=	Santoprene®
[SS]	=	Stainless Steel
[T]	=	PTFE
[V]	=	Viton®

MANIFOLD / FLUID CAP MATERIAL OPTIONS E2P10-KXXXX-XX-XXA

			PVDF					
			NPT Threads		BSP Threads		ANSI / DIN Flange	
			E2P10-KAXXX-XX-XXA		E2P10-KBXXX-XX-XXA		E2P10-KYXXX-XX-XXA	
Item	Description	Qty	Part No.	Mt	Part No.	Mtl	Part No.	Mt
5	Backup washer	2	98164-3	[SS]	98164-3	[SS]	98164-3	[SS]
6	Fluid side Washer	2	98174-3	[K]	98174-3	[K]	98174-3	[K]
15	Fluid cap	2	FHP10023-3	[K]	FHP10023-3	[K]	FHP10023-3	[K]
26	Bolt, Hex head	16	FHP10047	[SS]	FHP10047	[SS]	FHP10047	[SS]
27	Bolt, Hex head	20	FHP10048	[SS]	FHP10048	[SS]	FHP10048	[SS]
28	Washer	36	96217	[SS]	96217	[SS]	96217	[SS]
29	Flange Nut	20	FHP10049	[SS]	FHP10049	[SS]	FHP10049	[SS]
60	Inlet Manifold	1	FHP10024B-3	[K]	FHP10024C-3	[K]	FHP10024A-3	[K]
61	Outlet Manifold	1	FHP10025B-3	[K]	FHP10025C-3	[K]	FHP10025A-3	[K]
73	Pipe Plug	2	FHP10027-3	[K]	FHP10027-3	[K]	FHP10027-3	[K]
145	O-ring	2	Y325-237	[B]	Y325-237	[B]	Y325-237	[B]
146	Screw, SHCS	8	Y256-103-E	[C]	Y256-103-E	[C]	Y256-103-E	[C]
147	Air Cap	2	98488-1	[SS]	98488-1	[SS]	98488-1	[SS]
189	Pipe Plug	2	Y17-51-N	[C]	Y17-51-N	[C]	Y17-51-N	[C]

DIAPHRAGM OPTIONS E2P10-XXXXX-XX-XXA

Item	Description	QTY	Santoprene® Diaphragm E2P10-XXXXA-XX-XXA		PTFE Diaphragm E2P10-XXXXT-XX-XXA	
			Part No	Mtl	Part No	Mtl
★ 7	Diaphragm - Outer	(2)	98165-A	[Sp]	98163	[T]
★ 8	Diaphragm - Inner	(2)	98166-A	[Sp]	98167-A	[Sp]
★ 10	Diaphragm - Inner (Back-Up)	(2)	----	---	98168-A	[Sp]

O-RING OPTIONS E2P10-XXXXX-XX-XXA

			Santoprene® Diaphragm E2P10-XXXXA-XX-XXA		PTFE Diaphragm E2P10-XXXXT-XX-XXA	
Item	Description	Qty	Part No.	Mtl	Part No.	Mtl
★ 19	O - Ring (1/8" x 2-1/8" OD)	(4)	93280	[EP]	93282	[T]
★ 33	O - Ring (1/8" x 1-5/8" OD)	(4)	Y323-333	[EP]	Y324-333	[T]
★ 41	O - Ring (1-3/16" x 1-3/8" OD)	(2)	Y324-123	[EP]	Y324-123	[T]
★ 59	O - Ring (1-3/16" x 1-3/8" OD)	(2)	Y327-123	[EP]	Y327-123	[T]

GEARBOX E2P10-XXXXX-XX-XXA

	100	Qty
-AX	67545-4	(1)
-BX	67545-2	(1)
-CX	67545-6	(1)

MOTOR / ADAPTER E2P10-XXXXX-XX-XXA

	191	223
-XA	67548	67546
-XB	67549	67547-1

OPTION CODE #1 E2X10-XXXXX-XX-XXA

	Item	Description	Part Number	Qty
-AXA	181A	Connector	59474-160	(1)
	181B	Connector	59756-160	(1)
	184	Tubing	98227-XXX-X	(0.78 ft)
	232	Tee	59761-60	(1)
	233	Plug	59463-60	(1)
-BXA	283	Leak Detect Sensor (not shown)	98006	(2)
-CXA	283	Leak Detect Sensor (not shown)	96270-2	(2)

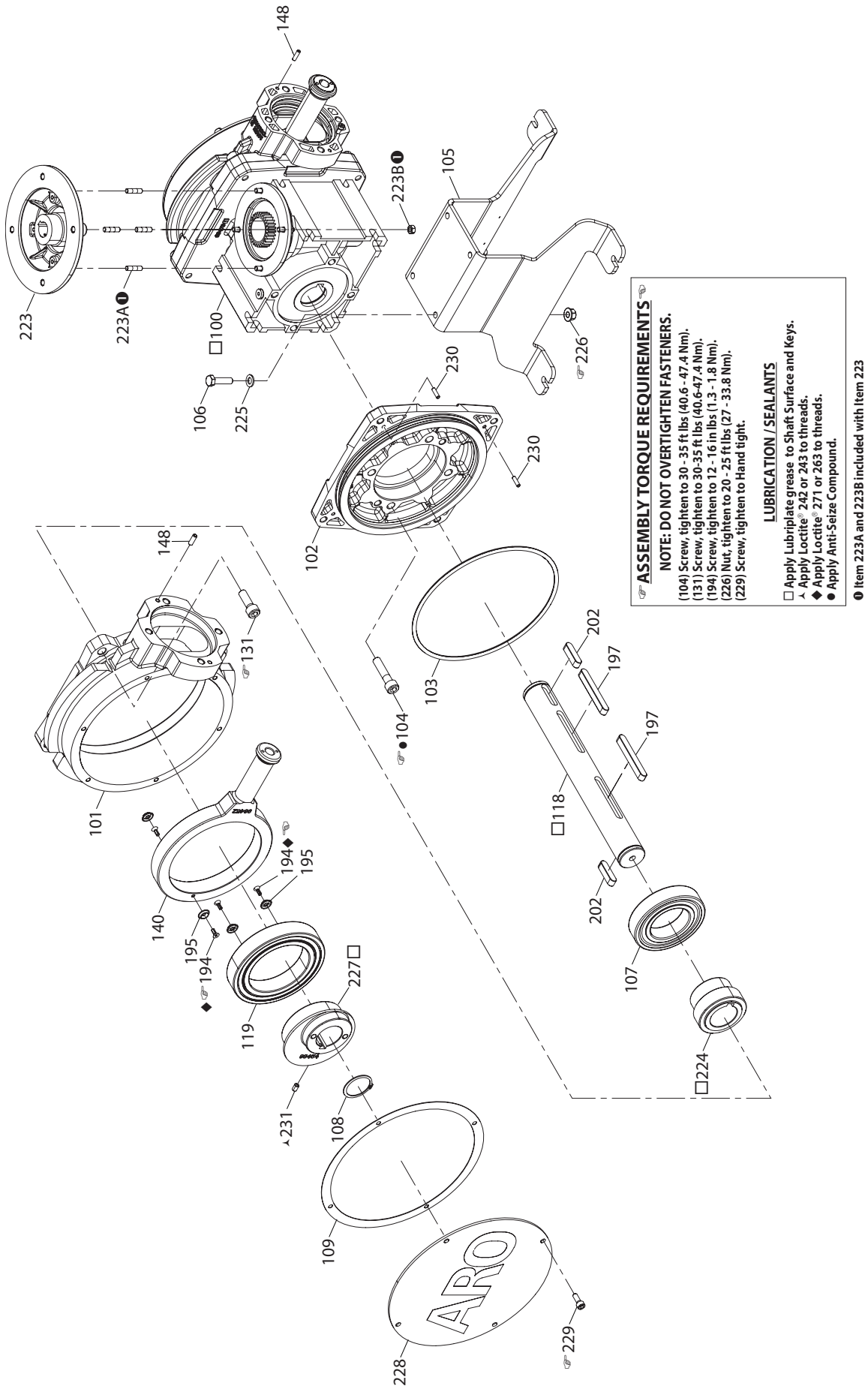
148
223
223A❶
□100
223B❶
105
106
225
230
226
102
230
148
131
101
103
104
202
197
197
□118
140
194◆
195
195
194
◆
119
227□
202
107
□224
231
108
109
ARO
228
229
ASSEMBLY TORQUE REQUIREMENTS
NOTE: DO NOT OVERTIGHTEN FASTENERS.
(104) Screw, tighten to 30 - 35 ft lbs (40.6 - 47.4 Nm).
(131) Screw, tighten to 30-35 ft lbs (40.6-47.4 Nm).
(194) Screw, tighten to 12 - 16 in lbs (1.3 - 1.8 Nm).
(226) Nut, tighten to 20 - 25 ft lbs (27 - 33.8 Nm).
(229) Screw, tighten to Hand tight.
LUBRICATION / SEALANTS
□ Apply Lubriplate grease to Shaft Surface and Keys.
⅄ Apply Loctite® 242 or 243 to threads.
◆ Apply Loctite® 271 or 263 to threads.
● Apply Anti-Seize Compound.
❶ Item 223A and 223B included with Item 223

Figure 4

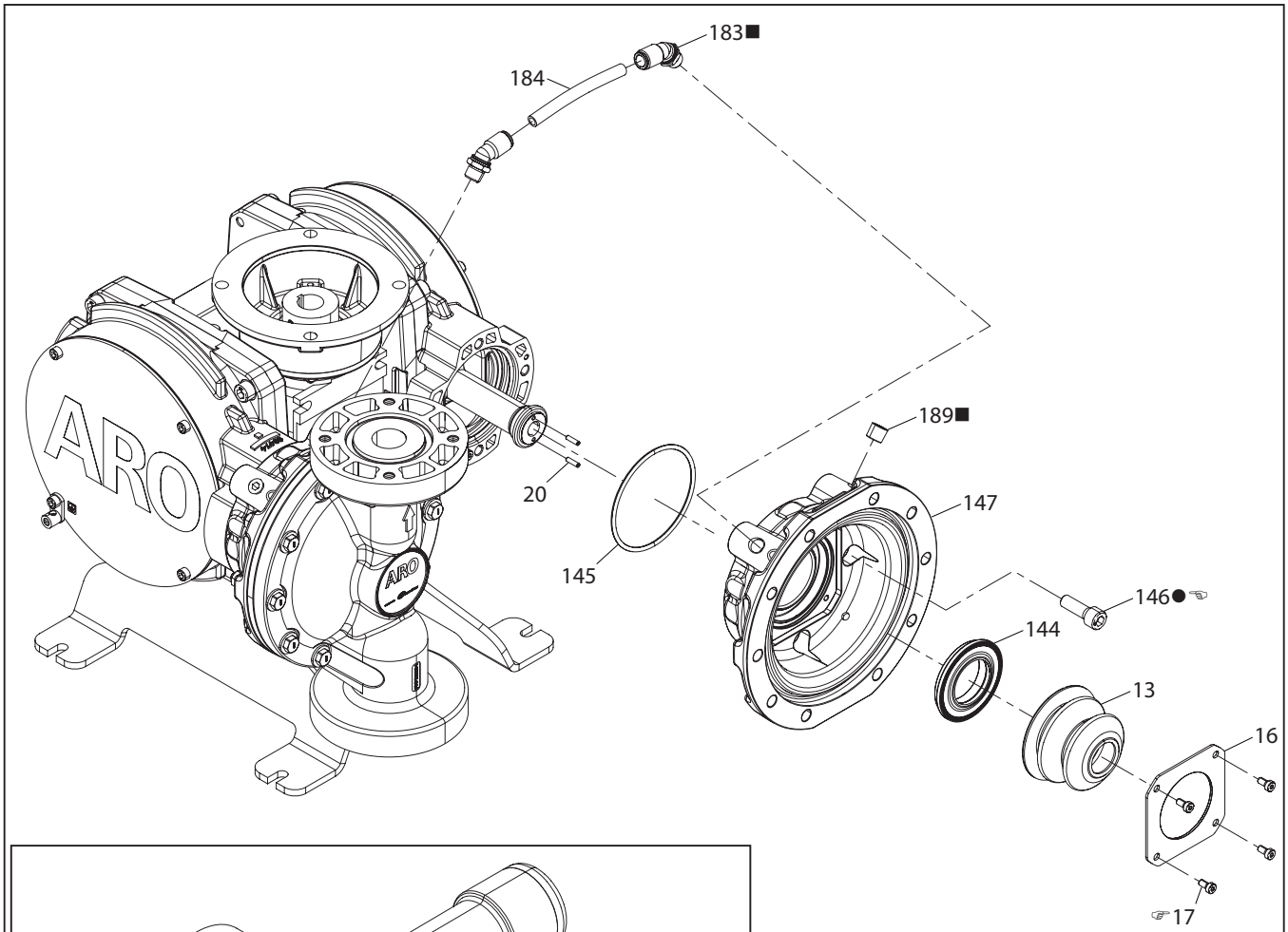

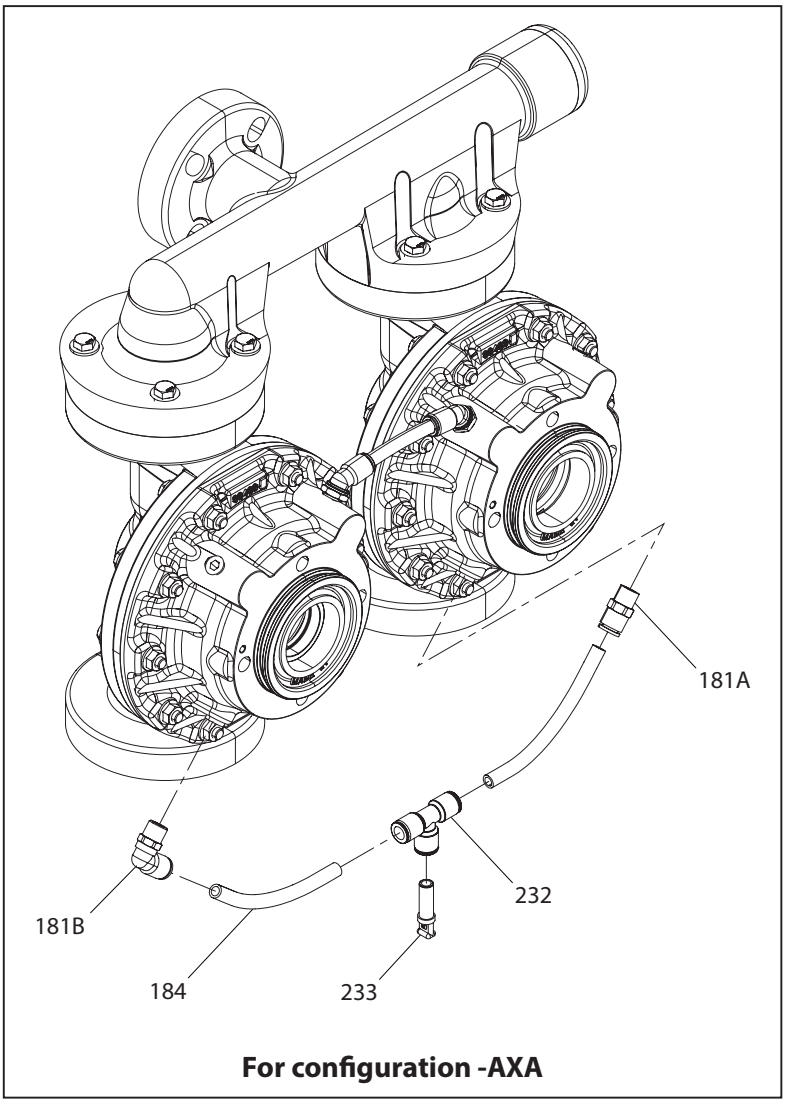

For configuration -AXA

ASSEMBLY TORQUE REQUIREMENTS

NOTE: DO NOT OVERTIGHTEN FASTENERS.

(17) Screw, tighten to 50 - 60 in lbs (5.6 - 6.7 Nm).
(146) Screw, tighten to 30 - 35 ft lbs (40.6 - 47.4 Nm).

LUBRICATION / SEALANTS

- ■ **Apply PTFE Tape**
- ● **Apply Anti-Seize Compound.**

Figure 5

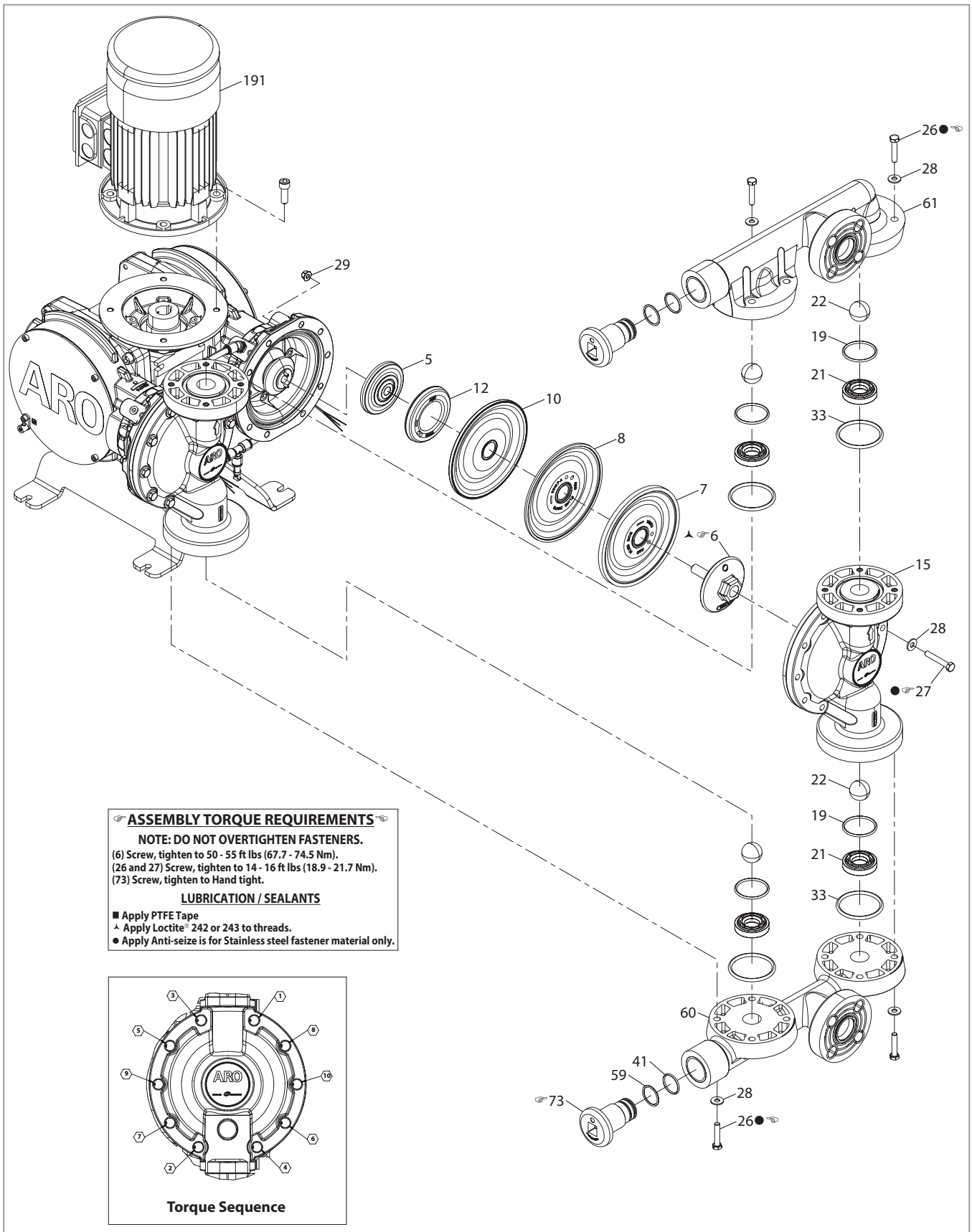
191
29
5
12
10
8
7
6
26●
28
61
22
19
21
33
15
28
●27
22
19
21
33
60
41
59
73
28
26●
ARO
ASSEMBLY TORQUE REQUIREMENTS
NOTE: DO NOT OVERTIGHTEN FASTENERS.
(6) Screw, tighten to 50 - 55 ft lbs (67.7 - 74.5 Nm).
(26 and 27) Screw, tighten to 14 - 16 ft lbs (18.9 - 21.7 Nm).
(73) Screw, tighten to Hand tight.
LUBRICATION / SEALANTS
■ Apply PTFE Tape
⅄ Apply Loctite® 242 or 243 to threads.
● Apply Anti-seize is for Stainless steel fastener material only.
Torque Sequence

Figure 6

FLUID SECTION DISASSEMBLY

- Loosen and remove bolts and Washers (26, 28) and remove Outlet manifold (61).
- Loosen and remove bolts and Washers (26, 28) and remove inlet manifold (60).
- Remove Balls (22), Seats (21) and O-rings (19, 33) if applicable.
- Loosen and remove Bolts, Washers and Nuts (27, 28, 29) and remove Fluid caps (15).

NOTE: Santoprene® Diaphragm models use a used primary Diaphragm (7) and backup Diaphragm (8). PTFE Diaphragm models use a primary Diaphragm (7) and a bilayer backup Diaphragm (8 and 10). Refer to the auxiliary view in the Fluid Section illustration.

- Loosen and remove overmolded Diaphragm washer (6), Primary Diaphragm (7), Back up Diaphragm (8 and 10), Inner Diaphragm washer (5) and Diaphragm soft pad (12) .
- Remove Screws (17), Bellows plate (16) and Bellows (13).

FLUID SECTION REASSEMBLY

- Reassemble parts in reverse order from the sequence in which they were removed. Refer to the torque requirements on page 14.
- Clean and inspect all parts. Replace worn or damaged parts with new parts as required.
- Install Bellows (13), Bellows plate (16) and secure with Socket head screw (17).
- Diaphragms should be installed as marked and should be concave towards Fluid cap (15). "Fluid side" marking should face fluid cap. "Drive side" marking should face Crankcase.
- Install Diaphragm soft pad (12), Inner Diaphragm washer (5), Primary Diaphragm (7), Back up Diaphragm (8 and 10), onto overmolded Diaphragm washer (6). Ensure mating holes in inner diaphragm washer (5) are aligned properly with pins (20) installed into connecting rod (140) for orientation before tightening. Install threaded portion of overmolded Diaphragm washer (6) into Connecting rod (140) and torque per specs listed on page 14.
- Install Fluid cap (15) using Hex head bolts, Washers and Nuts (27, 28, 29).

NOTE: do not complete final torque of hex head bolts, washers and nuts (27, 28, 29) until after manifolds (60, 61) are installed.

- Install Balls (22), Seats (21) and (O- rings 19 and 33) if applicable.
- Install Outlet manifold (61) using Bolts (26) and Washers (28).
- Install Inlet manifold (60) using Bolts (26) and Washers (28).
- Tighten bolts, washers, nuts (26, 27, 28, 29) per torque specs on page 14.
- Re-check torque settings after pump has been restarted and run awhile.

ACTUATOR MODULE SERVICE

- Actuator Module service continued from Fluid Section service.
- Loosen and remove mounting bolts on motor adapter (223) and remove motor (191) from pump.
- Remove motor from pump.
- Inspect and replace old parts with new parts as necessary, looking carefully for deep scratches on surfaces, and nicks or cuts in "O" rings.
- Take precautions to prevent cutting "O" rings upon installation.
- Do not over-tighten fasteners. Refer to torque specification listed on pages 12 to 14.
- Re-torque fasteners after re-starting pump.

ACTUATOR MODULE DISASSEMBLY

- Remove flexible tube connection (184).
- Remove bushing (144) from each air cap (147).
- Loosen and remove screws (146) from each air cap (147) and remove the air cap from each actuator housing (101).
- Loosen and remove screws (229) from each actuator housing end cover (228). Remove actuator housing end cover and gasket (109) from each actuator housing (101).
- Remove external retaining ring (108) from each end of the crankshaft (118).
- Loosen and remove screws (131) from each actuator housing (101).
- From each end of the crankshaft (118), pull and remove sub-assembly of actuator housing (101), connecting rod (140), connecting rod bearing (119), and cam (227). Cam (227) will slide free of crankshaft and simultaneously the actuator housing (101) will slide free of the adapter plate (102).
- Loosen and remove bolts (104) from each adapter plate (102). From each end of the crankshaft (118), pull and remove sub-assembly of adapter plate (102), bearing (107), and bearing bushing (224).
- Slide and remove crankshaft (118) with keys (197, 202) from gearbox (100).

ACTUATOR MODULE ASSEMBLY

- Reassemble parts in reverse order from the sequence in which they were removed.
- Clean and inspect all parts. Replace worn or damaged parts with new parts as required.
- If bearing (107) needs to be replaced, it should be serviced prior to installing bearing bushing (224) and adapter plate (102). To replace bearing (107), use arbor press to press out the existing bearing from bearing bushing (224) and adapter plate (102). Use arbor press to install new bearing (107) into adapter plate (102) and onto bearing bushing (224), making sure the inner race is fully seated on the bearing bushing (224) and outer race is fully seated in the adapter plate (102).
- If connecting rod bearing (119) needs to be replaced, it should be serviced prior to installing connecting rod (140). To replace connecting rod bearing (119), loosen and remove screws and washers (194, 195) which will require heat to breakdown threadlocker before removal. Next use arbor press to press out the existing bearing from the connecting rod (140) and cam (227). Use arbor press to install new connecting rod bearing (119) into connecting rod (140) and onto cam (227). Make sure outer race of bearing (119) is flush with face of connecting rod (140) and inner race is fully seated onto cam (227). Apply threadlocker as noted on page 12, then install and tighten screws and washers (194, 195).
- Slide crankshaft (118) with keys (197, 202) into mating bore in gearbox (100).
- Place sub-assembly of adapter plate (102), bearing (107) and bearing bushing (224) over each end of the crankshaft (118). Adapter plate will seat into mating bore in gearbox (100). Roll pins (230) should be oriented towards long side of support foot (105). Install and tighten screws (104) though each adapter plate (102) and into gearbox (100). Torque per torque spec on page 12.
- Install sub-assembly of actuator housing (101), connecting rod (140), connecting rod bearing (119) and cam (227) onto each end of the crankshaft (118). Actuator housing (101) will slide onto mating interface on adapter plate (102) while simultaneously cam (227) will slide onto crankshaft (118). Take care to ensure roll pins (230) align with mating holes in actuator housing (101). Mating interface on actuator housing (101) for air cap (147) should be oriented towards long side of support foot (105). Install and tighten screws (131) through actuator housing (101) and into adapter plate (102) per torque spec on page 12.
- Install external retaining ring (108) onto each end of the crankshaft (118).
- Install actuator housing end cover (228) and gasket (109) onto each actuator housing (101) using screws (229).
- Install air cap (147) onto each actuator housing (101) using bolts (146). Take care to ensure roll pins (148) in actuator housing (101) align with mating hole in air cap (147).
- Place bushing (144) over each connecting rod (140) and into mating interface on each air cap (147).
- Install flexible tube connection (184).

11. TROUBLESHOOTING

Issue	Possible Cause	Action
Pump will not operate	Crankshaft bearing failure.	Replace crankshaft bearing (107).
	Connecting rod bearing failure.	Replace connecting rod bearing (119).
	Improper power wiring / power supply to motor.	Follow motor manufacturer's instructions for power supply and wiring. Verify motor terminal box is configured for proper voltage (i.e. configured for low voltage or high voltage).
Erratic behavior or excessive noise / knocking	Excessive ball check wear or failure, or ball check jammed in ball seat or ball cage.	Check to ensure ball checks are all installed, intact, in place, and in acceptable condition.
	System operating outside of NPSH requirements.	Ensure pump is running within NPSH requirements.
	Foreign particle stuck in inlet manifold or ball check.	Check to ensure no solid particles exceeding solids passing capability are passed through the pump.
Pump will not achieve pressure	Excessive ball check wear or failure, or ball check jammed in ball seat or ball cage.	Check to ensure ball checks are all installed, intact, in place, and in acceptable condition.
Pump will not achieve flow	Excessive ball check wear or failure, or ball check jammed in ball seat or ball cage.	Check to ensure ball checks are all installed, intact, in place, and in acceptable condition.
Premature Diaphragm Failure	Fluid cap to air cap bolts have loosened or diaphragm bolt has loosened allowing air to seep in between diaphragms.	Check and use recommended torque for all fasteners. Re-torque all fluid section bolts prior to operation.
Rubber Bellows Failure	Bellows (13) was not replaced with each diaphragm change.	Replace rubber bellows (13) with each diaphragm replacement.
Process Fluid Leak	Bolts / fasteners have loosened allowing fluid to leak from fluid retaining components mating / sealing surfaces.	Check and use recommended torque for all fasteners. Re-torque all fluid section bolts prior to operation.

Dimensions shown are for reference only. They are displayed in inches and millimeters (mm).

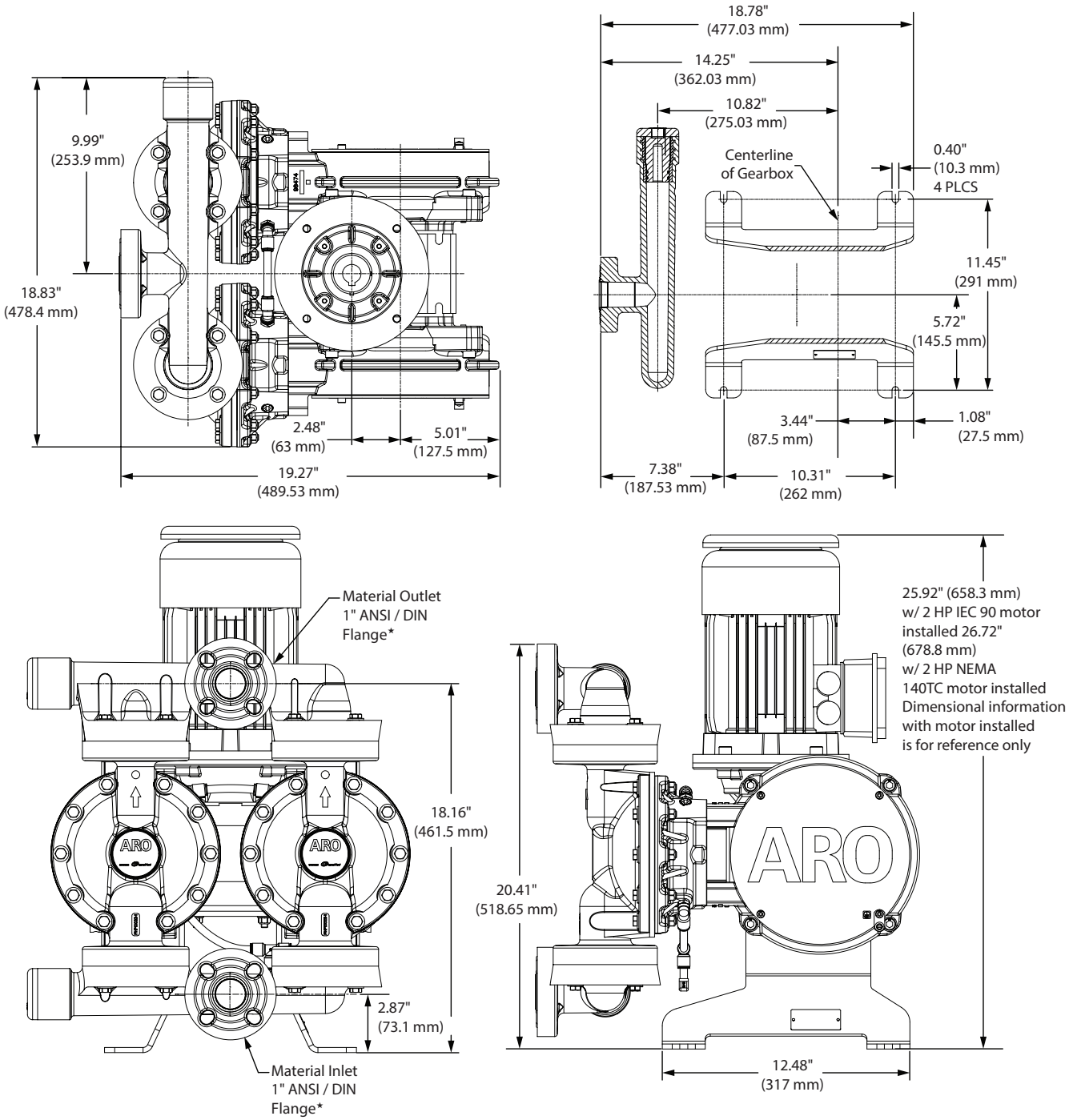

★ Also available with 1″ NPT or 1″ BSP connections

Figure 7